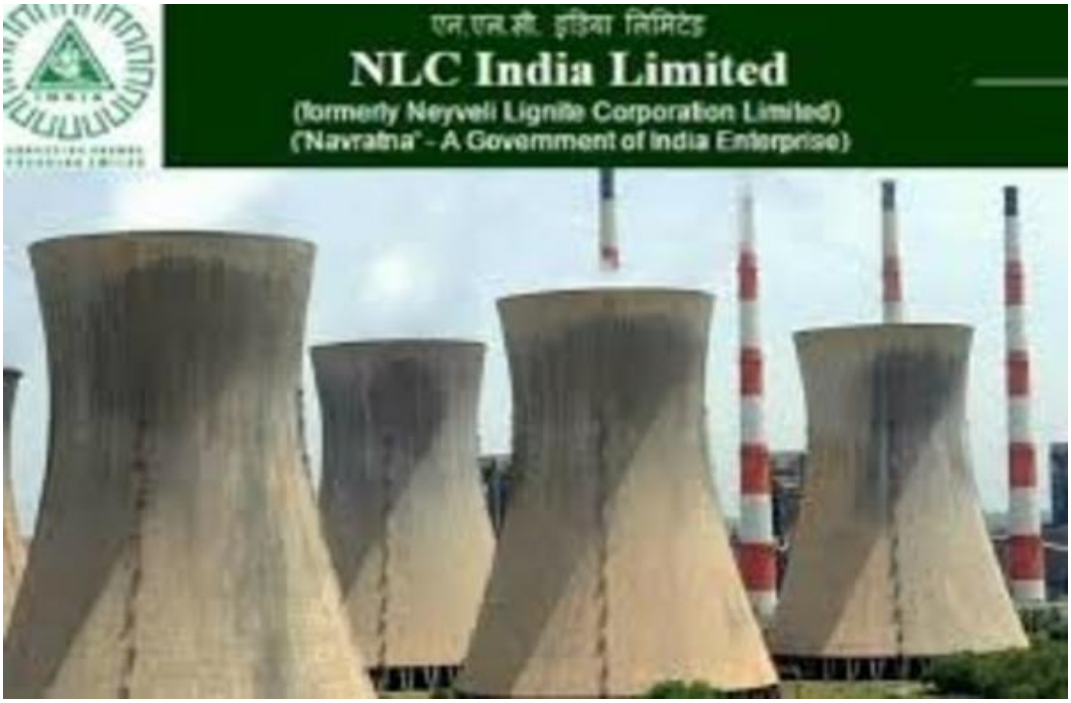

TECHNICAL SPECIFICATION FOR NETWORKING OF IMCC'S AND NUMERICAL RELAY (SPECIFICATION NO. EP-4-TS-NNTP-NW-001 R00)

MARCH 6, 2019

BHARAT HEAVY ELECTRICALS LIMITED

ELECTROPORCELAINS DIVISION, BANGALORE

PRE-QUALIFICATION REQUIREMNET

Sl.no.	Description	Document required
1.	Bidder shall have executed similar nature of work i.e. (networking of Ethernet switch/ termination of LAN cable at RJ45 port, splicing of FO cable and termination of same at FO port using suitable adaptor) in last 5 yrs.	Purchase order copy and approved drawings/ commissioning certificate with descriptive nature of work executed.
2.	Bidder shall have valid ISO 9001 Certificate.	ISO certificate

TABLE OF CONTENTS

I. SITE DETAILS
II. CODES & STANDARDS FOR ALL EQUIPMENTS
III. SCOPE OF SUPPLY & WORK
IV. TECHNICAL REQUIREMENT
a. SYSTEM ARCHITECTURE FOR IMCC AND RELAY NETWORK
b. IEC61850 SYSTEM ARCHITECTURE FOR LT SWITCHBOARD (E.G. BOILER MCC ROOM UNIT 1)
c. SYSTEM ARCHITECTURE FOR LT SWITCHBOARD PANEL – CONFIGURATION 1
d. SYSTEM ARCHITECTURE FOR LT SWITCHBOARD PANEL – CONFIGURATION 2
e. GATEWAY:- MODBUS TCP TO IEC61850
f. MANAGED ETHERNET SWITCH
g. LAPTOP
h. 4PAIR G-TYPE CABLE
V. SERVICES
VI. DOCUMENTS, DRAWINGS & TESTS
VII. DOCUMENTS TO BE SUBMITTED IN THE OFFER
VIII. BILL OF MATERIAL

ANNEXURES

1) ANNEXURE-A (INPUT FOR NETWORKING)
2) ANNEXURE-B (SYSTEM ARCHITECTURE)
3) ANNEXURE-C (BILL OF MATERIAL)
4) ANNEXURE-D (PRICE BID FORMAT)
5) ANNEXURE-E (ADDITION DELETION LIST)
6) ANNEXURE-F (DRAWINGS/ DOCUMENTS SUBMISSION)
7) ANNEXURE-G (DEVIATION SHEET)

SPECIFICATION FOR NETWORKING OF IMCC'S & NUMERICAL RELAY'S IN LT SWITCH BOARDS

I. SITE DETAILS

Project Title	:	2X500 MW Neyveli New Thermal Power Project (NNTPP)
Location	:	200 kms south of Chennai and 50 kms south-west of Cuddalore
Nearest Railway Station	:	Neyveli
Nearest Sea Port	:	Chennai, at a distance of 200 km
Nearest Airport	:	Chennai, at a distance of 200 km
Road Access/Approach to site	:	Connected by Chennai- Thanjavur NH 45C road and state highway connecting Cuddalore – Virudhachalam via Neyveli. Both NH and state high way roads are well connected to NLC township roads. The approach road is approximately 15 kms Site from Chennai–Thanjavur NH-45C road.

II. CODES & STANDARDS FOR ALL EQUIPMENTS

1. All equipment and materials shall be designed, manufactured and tested in accordance with the latest applicable Indian Standards (IS)/ IEC except where modified and/or supplemented by this specification.
2. Equipment and materials conforming to any other standard which ensures equal or better quality may be accepted. In such case, copies of the English version of the standard adopted shall be submitted along with the bid.
3. The electrical installation shall meet the requirements of Indian Electricity Rules as amended up to date and relevant IS Codes of Practice. In addition, other rules or regulations applicable to the work shall be followed.

III. SCOPE OF SUPPLY & WORK

The Bidder's scope of supply & work shall include the supply, wiring, testing and commissioning of the following:

1. Supply of 9 numbers of Modbus TCP to IEC61850 gateway to connect the IMCC devices to the RIO panel.
2. LAN along with IEC 61850 Ethernet Switches and necessary LIU's.
3. CAT5E cable for communication from RJ45 port & HDPE Conduit (length as required), Terminal equipment such as LIU, adaptors etc. (quantity as required) and Laptops (3 No's).

4. Mounting of Ethernet Switches in switchboard mentioned in this tender (**Annexure-A)** and providing DC/AC supply through MCB is in bidder scope.
5. Connection of Relay to Ethernet switch using CAT5E cable for RJ45 port is in bidder scope. Termination with proper identification at both ends is also in bidder's scope.
6. Suitable gateway to interface IMCC's and Numerical relay network.
7. Laying, Termination & Supervision of LAN cable from relay/IMCC's to ETHERNET switch and FO cable laying from Ethernet switch to Ethernet switch and terminating up to CUSTOMER RIO panel is in bidder's scope.
8. Apart from equipment mentioned below or elsewhere in specification, any other equipment required to meet the intended specification is in scope of bidder.
9. Any hardware such as RJ45 connector, FO adaptor etc required for termination of LAN (CAT5E)/ FO cable is in bidder's scope.
10. Refer **Annexure-B** for typical configuration of such a proposed system.
11. Though minimum items required for network LAN have been listed in the enquiry however, any hardware required for networking and successful operation is in bidder scope. Necessary hardware required for termination of communication cable between relays, IMCC's, Ethernet switches and RIO panel are in bidder's scope.
12. All items shall be guaranteed for successful operation for a period of 36 months from the date of receipt of complete lot of all items against the project.
13. Bidder's scope shall include services mentioned elsewhere in the specification.
14. Bidder to provide unit price for all items covered under main items for addition and deletion at later stage.
15. The offer shall be submitted in two part-bid. The bidder's technical representative shall visit BHEL EPD for technical discussions and on the spot finalization of technical issues, if needed, within 1 weeks after technical bid opening. Exact date will be confirmed to bidder by BHEL.

IV. TECHNICAL REQUIREMENT

A. System Architecture for IMCC and Relay Network

The complete system architecture for IMCC and Relay network comprises LT Switchboard located at various locations. At particular location the Switchboard panels are interconnected using Fiber optic cable to the Ethernet switch and Ethernet switch further interconnected in RIO panel located at the same location.

This Ethernet switch acts as an interface to connect to the customer panel. Below diagram shows high level indication of all the panels located in various location.

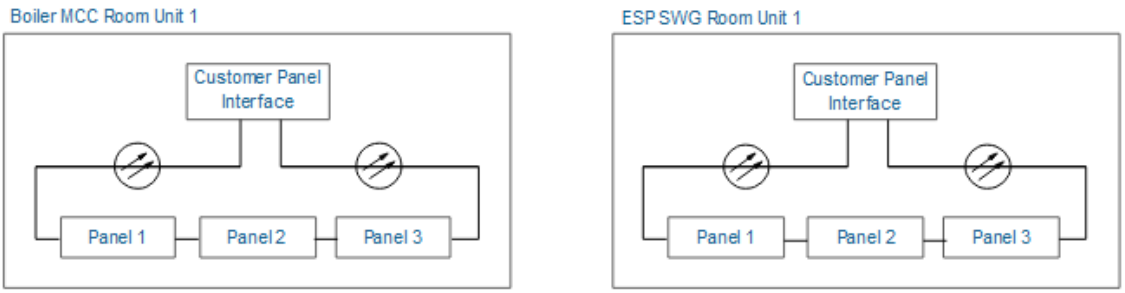

B. IEC61850 System Architecture for LT Switchboard (E.g. Boiler MCC room unit 1)

Breaking down the above block diagram we will take e.g. of Boiler MCC room unit 1. As earlier mentioned, this comprises of multiple LT Switchboard panel which are interconnected through the fiber optic cable. In this case there are three LT Switchboard panels which are interconnected using the fiber optic cable. The LT switchboard panel's in-turn are connected to the Customer RIO through a switch located in the RIO Panel within the same room.

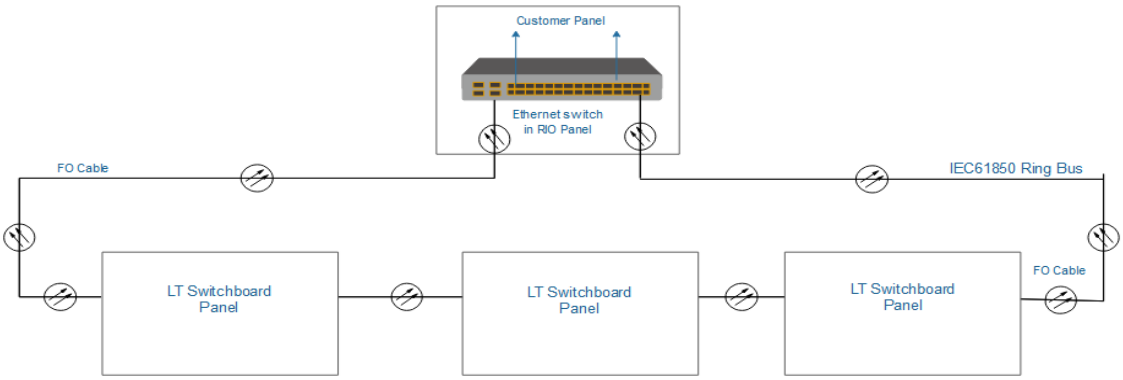

Looking into each Switchboard panel they can be categorized into two main configurations.

C. System Architecture for LT Switchboard Panel – Configuration 1

In this configuration there will be certain number of numeric relays and Intelligent Motor controllers which are connected to managed switch using Ethernet cable (cat5e). The Intelligent Motor controllers cannot be directly connected to the IEC61850 since it supports only Modbus TCP protocol. The unit as shown in the

figure below acts as a gateway taking the data through Modbus TCP from the Intelligent Motor Controllers and converting the data to the IEC61850 Protocol.

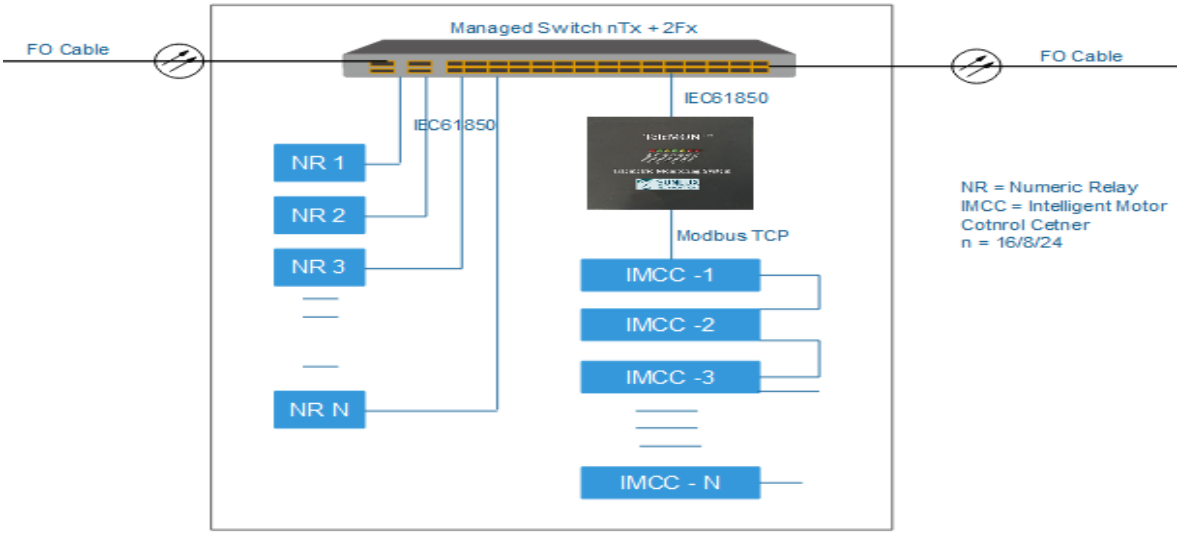

D. System Architecture for LT Switchboard Panel – Configuration 2

This configuration is similar to the configuration 1 only difference being the IMCC is not required to be connected to the switch. This eliminates the need of Modbus TCP to IEC61850 gateway.

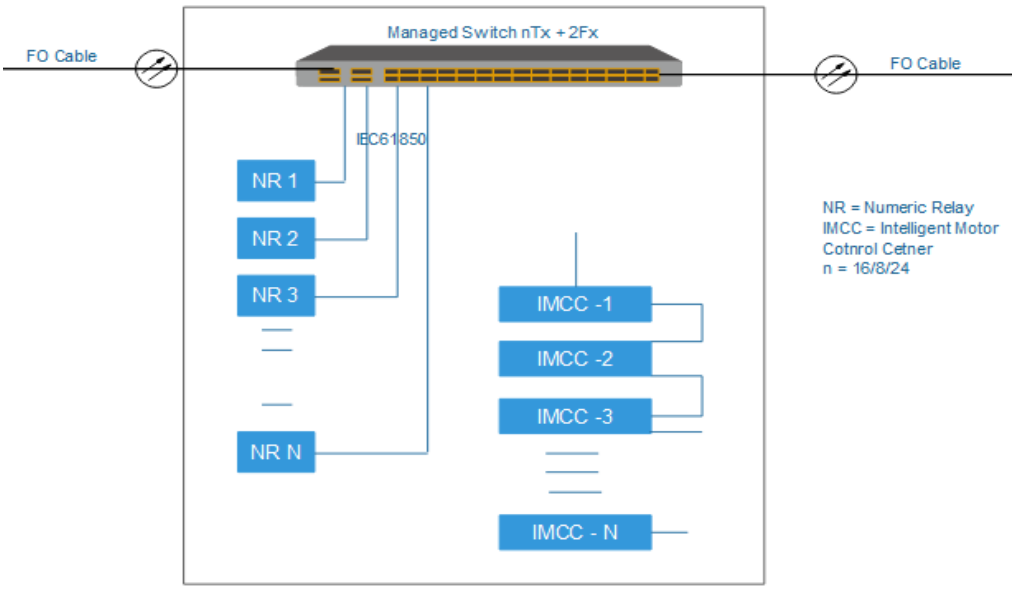

E. GATEWAY:- Modbus TCP to IEC61850

The Modbus TCP to IEC 61850 converter gateway shall be suitable for operation in electrically harsh and climatically demanding utility substation and industrial environments. The gateway shall be capable of handling large data at high speed. Maximum 90 no's of device i.e. IMCC's shall be connected to single gateway and 84 resistor data will be required from each device (IMCC's).

- Modbus TCP and IEC61850 support on 10/100 Fast Ethernet (RJ45)
- Device level security with Secure Boot.
- Ruggedized (shock and vibration resistant) for challenging industrial and manufacturing environments
- Can be powered on by 24V DC/AC (SMPS for 240V AC /220V DC TO 24V DC/AC SHALL BE bidder's scope)
- Operating temperature of 0 to 60Dc and humidity of 10-95% non-condensing

F. Managed Ethernet Switch

Ethernet switches shall be layer 2 managed industrial Ethernet switch designed to operate reliably in electrically harsh and climatically demanding utility substation and industrial environments. It supports up to 2 gigabit fiber ports and 8/16/24 fast Ethernet copper ports, meets the IEC61850. Ethernet Switch shall be 19-inch rack/Din rail mountable device and its internal modular design offers the maximum flexibility for easy expansion. Switch shall supports many Layer 2 software features such as port, VLAN, multicast, QoS, fast redundant ring. It supports Console, Telnet, Web management and network management software based on SNMP.

Salient Features

- Supports min 2 gigabit fiber ports and 8/16/24 fast Ethernet fiber/copper ports
- Internal modular design for easy expansion
- Supports DT-Ring, DRP, RSTP for network redundancy (special version supports DRP)
- Supports IEC61850 MMS management (special version supports)
- Supports alarm and syslog upload
- 1000 Mbps single mode FO ports & 10/100 Mbps Cu ports

G. LAPTOP

Minimum technical requirements for the laptop shall be as follows:

a)	Processor	: i7 or latest.
b)	Hard Disk	: 2 TB
c)	RAM	: 16 GB DDR 3
d)	Screen	: 15 inch with touch.
e)	Wifi	: 802.11 ac OR higher.
f)	Wifi model	: Intel Centrino Wireless - AC 3160.
g)	Blue tooth	: 4
h)	USB ports	: 3
i)	Hard Drive Speed	: 5400 pm
j)	Graphics Card	: Intel HD Graphics 4400
k)	Operating System	: Windows 10 or latest versions. (Licensed versions)
l)	Softwares	: MS Office Package-10, Acrobat Reader Professional 10,
m)	Antivirus	: Licensed for 4 years.

H. 4PAIR G-TYPE CABLE

CAT5E or better cable shall be as per ISO/IEC 11801; EN 50288-3-1; IEC61156-5; EIA/TIA 568-B.2 for preparation of LAN network.

V. SERVICES

a) Bidder shall consider in their scope without additional cost implication 3 visits of 5man-days of their engineer for providing full support during integration of system with upper level system (DCS/DDCMIS) at site. This support is in in addition to scope of supply & work as per sl.no. III.

b) Bidder to supply all upgrades of the software package free of cost under the guarantee period. Any bugs encountered during usage shall be rectified. Original media shall be replaced if damaged during usage.

c) Support and maintenance for the package, including onsite support shall be provided as and when required during the guarantee period by the contractor/supplier without any additional charges to owner.

d) Bidder shall also consider the 2 visit of 5man-days of SIEMENS numeric relay service engineer/Channel partner for extraction of *ICD file and integration of same with customer upstream system.

e) Bidder shall also consider the 2 visit of 5man-days of SCHNEIDER TESYS intelligent motor controller service engineer/Channel partner for configuration of IMCC to extract the data and integration of same with customer upstream system.

f) The cost of above services shall be the part of sl.no 1 (b) & 1(c) of price format.

VI. DOCUMENTS, DRAWINGS & TESTS

1) The vendors shall furnish two sets of type test reports, with the order acceptance for approval / review by customer. In case any discrepancy or inadequacy is found by the customer during approval, the same shall be resolved by supplier with customer with no binding on BHEL and without any price implication.
2) Complete Bill of Material shall be furnished with the offer.
3) Bidder to furnish the sub-vendor list for critical bought item like Ethernet switches, Gateway, FO/Copper cable, LIUs, cable connectors etc for BHEL/customer approval during detail engineering.
4) Bidder to furnish the installation CDs for all applicable licensed software for the system in the offered package along with the supplies.

VII. DOCUMENTS TO BE SUBMITTED IN THE OFFER

Technical Offer (technical-Bid)

1) Signed & stamped copy of entire specification
2) Deviations, if any, to be specifically mentioned in **Annexure-G**.
3) Detailed Bill of Material
4) Make & Model Numbers offered for all items mentioned in scope of supply
5) Any other technical document, if required.

Commercial Offer (Price-Bid) (To be offered in a separate sealed envelope)

1) Signed & stamped copy of commercial bid.
2) NIT requirements
3) Unit Price of all equipment, as mentioned in **Annexure-E**.
4) Price bid as per price format enclosed (**Annexure-D**)
5) Any other document, if required.

VIII. BILL OF MATERIAL (ANNEXURE-C)

Sl. No	Description	Make	Quantity	Unit
1	Modbus TCP to IEC61850 Gateway with SMPS		9	EA
2	Layer 2 Ethernet Switch with 2 100Base-FX Single Mode Fibre Ports (24Tx * 2Fx) with MCB	1.RUGGEDCOM 2.GARRETCOM 3.NETGEAR 4.HIRSCHMANN 5.MOXA 6.CISCO	4	EA
3	Layer 2 Ethernet Switch with 2 100Base-FX Single Mode Fibre Ports (16Tx * 2Fx) with MCB		12	EA
4	Layer 2 Ethernet Switch with 2 100Base-FX Single Mode Fibre Ports (8Tx * 2Fx) with MCB		11	EA
5	Cat5e cable*		40000	MTR
6	FO cable adaptor/connector		1	LOT
7	Cat5e cable connector		1	LOT
8	LAPTOP	DELL/HP/LANOVO	3	EA
9	HARDWARES (E.G. LUGS, GLANDS, CABLE TIE, DINRAIL, FERRULES ETC)	REPUTED	1	LOT
10	MOUNTING OF GATEWAY & ETHERNET SWITCHES WITH ASSOCIATED ACCESSORIES, LAYING OF CABLE, TERMINATION OF CABLES ETC.		1	LOT

* The length of CAT5E cable is tentative and final length shall be as per actual site requirement.

NOTE: - Required single mode FO cable is in BHEL-EPD SCOPE and same shall be issued by BHEL free of cost at site.

Bharat Heavy Electricals Limited
(A GOVERNMENT OF INDIA UNDERTAKING)
ELECTROPORCELAINS DIVISION
Prof. C.N.R.Rao Circle, Science Institute Post,
Malleshwaram, BANGALORE – 560 012 INDIA
Website : www.bhelceramics.com

2X500MW NEW NEYVELI TPS
TECHNICAL SPECIFICATION. EP-4-TS-NNTP-NW-001 R00
INPUT FOR NETWORKING OF IMCC & NUMERICAL RELAY (ANNEXURE-A)

SWITCHBOARD NAME	DESGN	LOCATION OF THE SWITCHBAORD	RIO LOCATION	NO. OF NUMERICAL RELAYS	NUMERICAL RELAY LOCATION IN SWITCHBOARD	NO. OF IMCC'S	ETHERNET SWITCH (FOR CONNECTING FO PORT)	ETHERNET SWITCH (FOR CONNECTING RJ-45 PORT)	REMARKS
BOILER MCC	1HA	BOILER MCC ROOM	CCR	5	6F,7F,8F	86	EFS-1HA_1HC 16Tx+2Fx	EFS-1HA_1HC 16Tx+2Fx	IMCC LOOPING WITH IEC 61850 (configuration-1)
BOILER ACDB	1HC	BOILER MCC ROOM		5	9F,11F,12F,13F	0			
VENTILLATION MCC	1TA	BOILER MCC ROOM		5	5F,6F,7F	12	EFS-1TA 8Tx+2Fx	EFS-1TA 8Tx+2Fx	Loop In-Out N/W (configuration-2)
VENTILLATION MCC	2TA	BOILER MCC ROOM		5	5F,6F,7F	12	EFS-2TA 8Tx+2Fx	EFS-1TB 8Tx+2Fx	Loop In-Out N/W (configuration-2)
ESP AC & VENTILLATION MCC	1TB	ESP SWG ROOM	ESP SWG ROOM UNIT-1	5	5F,6F,7F	18	EFS-1TB_1HD 8Tx+2Fx	EFS-1TB_1HD 8Tx+2Fx	Loop In-Out N/W (configuration-2)
ESP ID FAN AREA DB	1HD	ESP SWG ROOM		0		44			IMCC LOOPING WITH IEC 61850 (configuration-1)
ESP SWG PANEL	1DB	ESP SWG ROOM		5	2F,3F,10F,17F,18F	0	EFS-1DB_1DC 16Tx+2Fx	EFS-1DB_1DC 16Tx+2Fx	
ESP SWG PANEL	1DC	ESP SWG ROOM		5	2F,3F,10F,17F,18F	0			
ESP SWG PANEL	1DD	ESP SWG ROOM		8	2F,3F,4F,5F,12F, 19F,20F,21F	0	EFS-1DD_1DE 16Tx+2Fx	EFS-1DD_1DE 16Tx+2Fx	
ESP SWG PANEL	1DE	ESP SWG ROOM		5	2F,3F,10F,17F,18F	0			
BOILER MCC	2HA	BOILER MCC ROOM	CCR	5	6F,7F,8F	86	EFS-2HA_2HC 16Tx+2Fx	EFS-2HA_2HC 16Tx+2Fx	IMCC LOOPING WITH IEC 61850 (configuration-1)
BOILER ACDB	2HC	BOILER MCC ROOM		5	9F,11F,12F,13F	0			
ESP AC & VENTILLATION MCC	2TB	ESP SWG ROOM	ESP SWG ROOM UNIT-2	5	3F,4F,5F	10	EFS-2TB_2HD 8Tx+2Fx	EFS-2TB_2HD 8Tx+2Fx	
ESP ID FAN AREA DB	2HD	ESP SWG ROOM		0		44			IMCC LOOPING WITH IEC 61850 (configuration-1)
ESP SWG PANEL	2DB	ESP SWG ROOM		5	2F,3F,10F,17F,18F	0	EFS-2DB_2DC 16Tx+2Fx	EFS-2DB_2DC 16Tx+2Fx	
ESP SWG PANEL	2DC	ESP SWG ROOM		5	2F,3F,10F,17F,18F	0			
ESP SWG PANEL	2DD	ESP SWG ROOM		8	2F,3F,4F,5F,12F, 19F,20F,21F	0	EFS-2DD_2DE 16Tx+2Fx	EFS-2DD_2DE 16Tx+2Fx	
ESP SWG PANEL	2DE	ESP SWG ROOM		5	2F,3F,10F,17F,18F	0			
DG PCC	1DF	DG BUILDING ROOM	DG ROOM	6	1F,2F,3F,4F,5F,6F	0	EFS-1DF 8Tx+2Fx	EFS-1DF 8Tx+2Fx	
DG PCC	2DF	DG BUILDING ROOM		6	1F,2F,3F,4F,5F,6F	0	EFS-2DF 8Tx+2Fx	EFS-2DF 8Tx+2Fx	
AC & VENTILLATION PCC	0DF	DG BUILDING ROOM		12	1F,3F,4F,5F,6F,8F, 9F,10F	0	EFS-0DF 16Tx+2Fx	EFS-0DF 16Tx+2Fx	
TURBINE MCC	1KA	LV SWG ROOM		5	6F,7F,8F	42	EFS-1KA_0QA 16Tx+2Fx	EFS-1KA_0QA 16Tx+2Fx	IMCC LOOPING WITH IEC 61850 (configuration-1)
MISC SERVICE MCC	0QA	LV SWG ROOM		5	6F,7F,8F	16			Loop In-Out N/W (configuration-2)

Bharat Heavy Electricals Limited
(A GOVERNMENT OF INDIA UNDERTAKING)
ELECTROPORCELAINS DIVISION
Prof. C.N.R.Rao Circle, Science Institute Post,
Malleshwaram, BANGALORE – 560 012 INDIA
Website : www.bhelceramics.com

2X500MW NEW NEYVELI TPS
TECHNICAL SPECIFICATION. EP-4-TS-NNTP-NW-001 R00
INPUT FOR NETWORKING OF IMCC & NUMERICAL RELAY (ANNEXURE-A)

EMERGENCY MCC	1DG	LV SWG ROOM	LV SWG ROOM UNIT-1	14	6F,7F,8F,9F,10F, 11F12F,14,15F,16F	52	EFS-1DG 16Tx+2Fx	EFS-1DG 16Tx+2Fx	IMCC LOOPING WITH IEC 61850 (configuration-1)
STATION SERVICE PMCC	0DA	LV SWG ROOM		20	2F,3F,4F,5F,6F,7F,8 F,9F,10F,11F,13F,1 4F,15F,	0	EFS-0DA 24Tx+2Fx	EFS-0DA 24Tx+2Fx	
UNIT SERVICE PMCC	1DA	LV SWG ROOM		24	2F,3F,4F,5F,7F,8F,9 F,10F,12F,13F,14F, 15F,17F,18F,19F,20 F	0	EFS-1DA 24Tx+2Fx	EFS-1DA 24Tx+2Fx	
TURBINE MCC	2KA	LV SWG ROOM	LV SWG ROOM UNIT-2	5	6F,7F,8F	42	EFS-2KA_0QB 16Tx+2Fx	EFS-2KA_0QB 16Tx+2Fx	IMCC LOOPING WITH IEC 61850 (configuration-1)
MISC SERVICE MCC	OQB	LV SWG ROOM		5	6F,7F,8F	16			Loop In-Out N/W (configuration-2)
EMERGENCY MCC	2DG	LV SWG ROOM		14	6F,7F,8F,9F,10F, 11F12F,14,15F,16F	52	EFS-2DG 16Tx+2Fx	EFS-2DG 16Tx+2Fx	IMCC LOOPING WITH IEC 61850 (configuration-1)
STATION SERVICE PMCC	0DB	LV SWG ROOM		20	2F,3F,4F,5F,6F,7F,8 F,9F,10F,11F,13F,1 4F,15F,	0	EFS-0DB 24Tx+2Fx	EFS-0DB 24Tx+2Fx	
UNIT SERVICE PMCC	2DA	LV SWG ROOM		24	2F,3F,4F,5F,7F,8F,9 F,10F,12F,13F,14F, 15F,17F,18F,19F,20 F	0	EFS-2DA 24Tx+2Fx	EFS-2DA 24Tx+2Fx	
WELDING SERVICE PCC	0DD	MV SWG ROOM	MV SWG ROOM	5	2F,5F,8F	0	EFS-0DD 8Tx+2Fx	EFS-0DD 8Tx+2Fx	
LIGHTING SWITCH BOARD	0DE	MV SWG ROOM		5	2F,7F,10F	0	EFS-0DE 8Tx+2Fx	EFS-0DE 8Tx+2Fx	
FUEL OIL PUMP HOUSE PMCC	0DC	FOPH BUILDING	FOPH ROOM	11	2F,6F,7F,8F,10F,11F, 12F,16F	22	EFS-0DC 16Tx+2Fx	EFS-0DC 16Tx+2Fx	IMCC LOOPING WITH IEC 61850 (configuration-1)
CCR AC MCC	0TA	AC PLANT ROOM	LV SWG ROOM	5	7F,8F,10F	28	EFS-0TA 8Tx+2Fx	EFS-0TA 8Tx+2Fx	Loop In-Out N/W (configuration-2)
AIR WASHER MCC	1SA	UNIT-1 ACW PUMP HOUSE	DG ROOM	5	4F,5F,6F	8	EFS-1SA 8Tx+2Fx	EFS-1SA 8Tx+2Fx	Loop In-Out N/W (configuration-2)
AIR WASHER MCC	2SA	UNIT-2 ACW PUMP HOUSE	DG ROOM	5	4F,5F,6F	8	EFS-2SA 8Tx+2Fx	EFS-2SA 8Tx+2Fx	Loop In-Out N/W (configuration-2)
CPU REGENERATION MCC	OWA	CPU BUILDING		0		26			Loop In-Out N/W (configuration-2)
AUXILIARY BOILER MCC	0WB	CPU BUILDING		0		25			Loop In-Out N/W (configuration-2)

ANNEXURE-B

IEC 61850 SYSTEM ARCHITECTURE FOR LT SWITCHBOARD
(#1HA, #1HC, #1TA & #2TA)

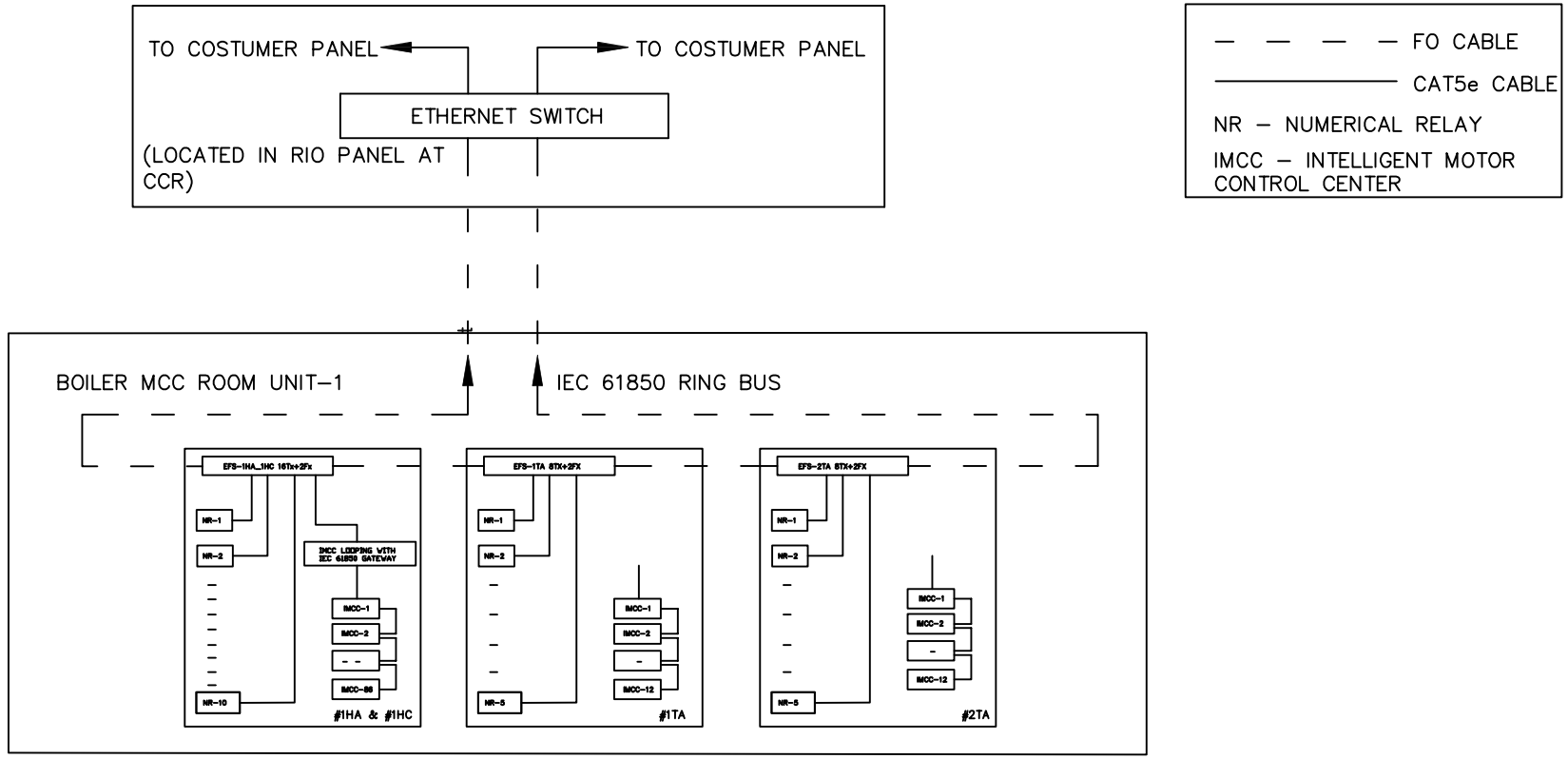

NOTE:

(1) CONNECTION BETWEEN ETHERNET SWITCHES SHALL BE THROUGH FO CABLE. SUPPLY, ROUTING, LAYING AND TERMINATION OF FO CABLE SHALL BE IN BHEL'S SCOPE.
(2) CONNECTION OF NUMERICAL RELAY TO ETHERNET SWITCH SHALL BE THROUGH CAT5e CABLE. SUPPLY AND TERMINATION OF CAT5e CABLE SHALL BE BHEL'S SCOPE.
(3) NR – NUMERICAL RELAY HAVING REAR RJ45 PORT WITH IEC–61850 PROTOCOL.

REV.	3.	4.	6
	1. As per MOM dt 04.12.2018	2.	5

	DATE	NAME
DRAWN	11.10.2018	UMAKANT
CHECKED	11.10.2018	SAURABH
APPROVED	11.10.2018	JJM

PROJECT:- 2X500MW NEW NEYVELI TPS
OWNER'S CONSULTANT :- TRACTEBEL ENGINEERING PVT LTD.
OWNER:- NLC LIMITED

BHARAT HEAVY ELECTRICALS LIMITED
ELECTROPROCELAIN DIVISION
BANGALORE

TITLE:-
SYSTEM ARCHITECTURE FOR IMCC & RELAY NETWORK FOR LT SWITCHBOARD

JOB CODE:

DRG. NO.	REV.
EP-3-CS-112-01B	01

SCALE: N/A	SHEET NO.	01
	NO. OF SHEET	10

This drawing shall not be copied without our written permission and the contents hereof must not be imparted to a third party nor be used for any unauthorised purpose. Contravention will be prosecuted
BHARAT HEAVY ELECTRICALS LTD.

This drawing shall not be copied without our written permission and the contents hereof must not be imparted to a third party nor be used for any unauthorised purpose. Contravention will be prosecuted
BHARAT HEAVY ELECTRICALS LTD.

IEC 61850 SYSTEM ARCHITECTURE FOR LT SWITCHBOARD
(#1TB, #1HD, #1DB, #1DC, #1DD & #1DE)

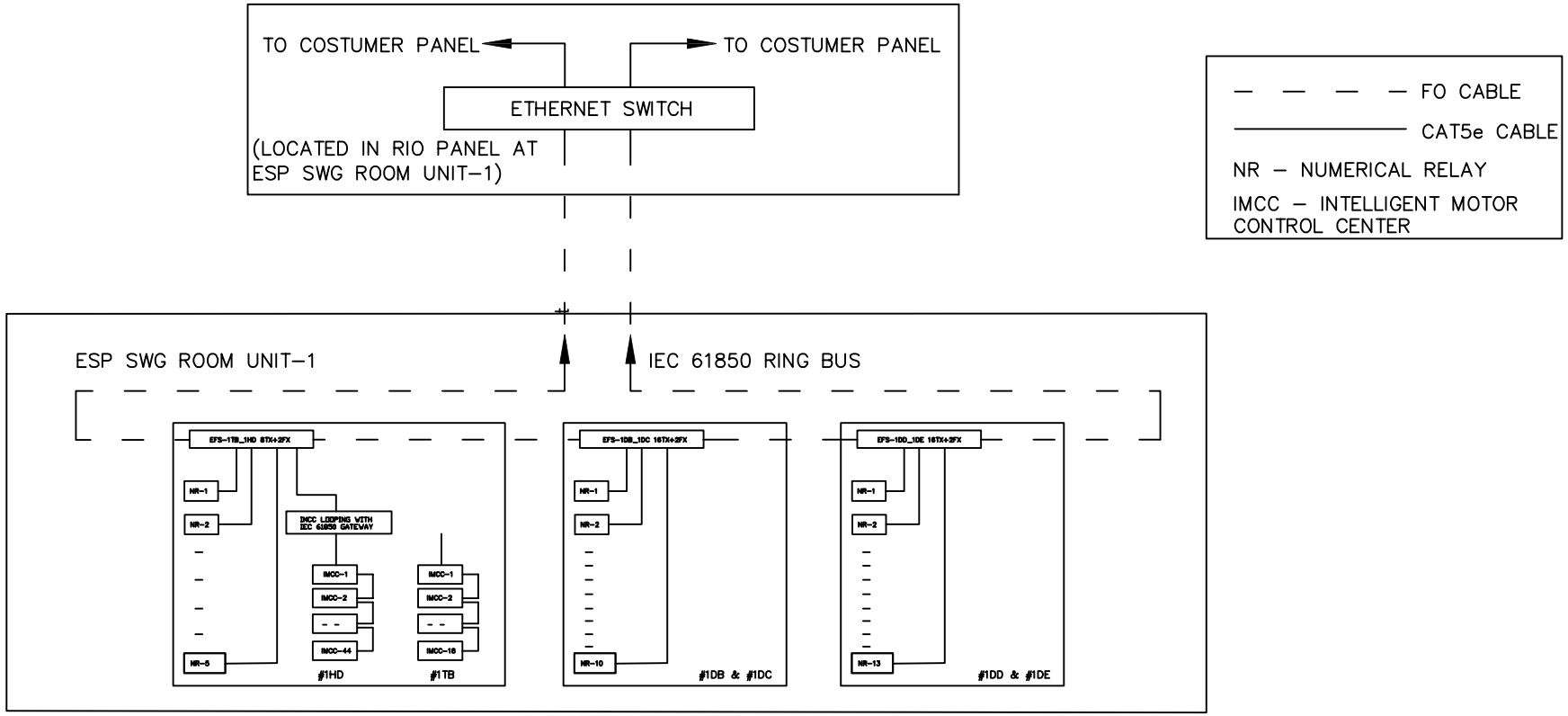

NOTE:

(1) CONNECTION BETWEEN ETHERNET SWITCHES SHALL BE THROUGH FO CABLE. SUPPLY, ROUTING, LAYING AND TERMINATION OF FO CABLE SHALL BE IN BHEL'S SCOPE.
(2) CONNECTION OF NUMERICAL RELAY TO ETHERNET SWITCH SHALL BE THROUGH CAT5e CABLE. SUPPLY AND TERMINATION OF CAT5e CABLE SHALL BE BHEL'S SCOPE.
(3) NR – NUMERICAL RELAY HAVING REAR RJ45 PORT WITH IEC-61850 PROTOCOL.

REV.	3.	4.	6
	1. As per MOM dt 04.12.2018	2.	5

	DATE	NAME
DRAWN	11.10.2018	UMAKANT
CHECKED	11.10.2018	SAURABH
APPROVED	11.10.2018	JJM

PROJECT:- 2X500MW NEW NEYVELI TPS
OWNER'S CONSULTANT :- TRACTEBEL ENGINEERING
OWNER:- NLC LIMITED

BHARAT HEAVY ELECTRICALS LIMITED
ELECTROPROCELAIN DIVISION
BANGALORE

TITLE:-
SYSTEM ARCHITECTURE FOR IMCC & RELAY NETWORK FOR LT SWITCHBOARD

JOB CODE:

DRG. NO.	REV.
EP-3-CS-112-01B	01

SCALE: N/A	SHEET NO.	02
	NO. OF SHEET	10

This drawing shall not be copied without our written permission and the contents hereof must not be imparted to a third party nor be used for any unauthorised purpose. Contravention will be prosecuted
BHARAT HEAVY ELECTRICALS LTD.

IEC 61850 SYSTEM ARCHITECTURE FOR LT SWITCHBOARD
(#1KA, #0QA, #1DG, #0DA, #1DA & #OTA)

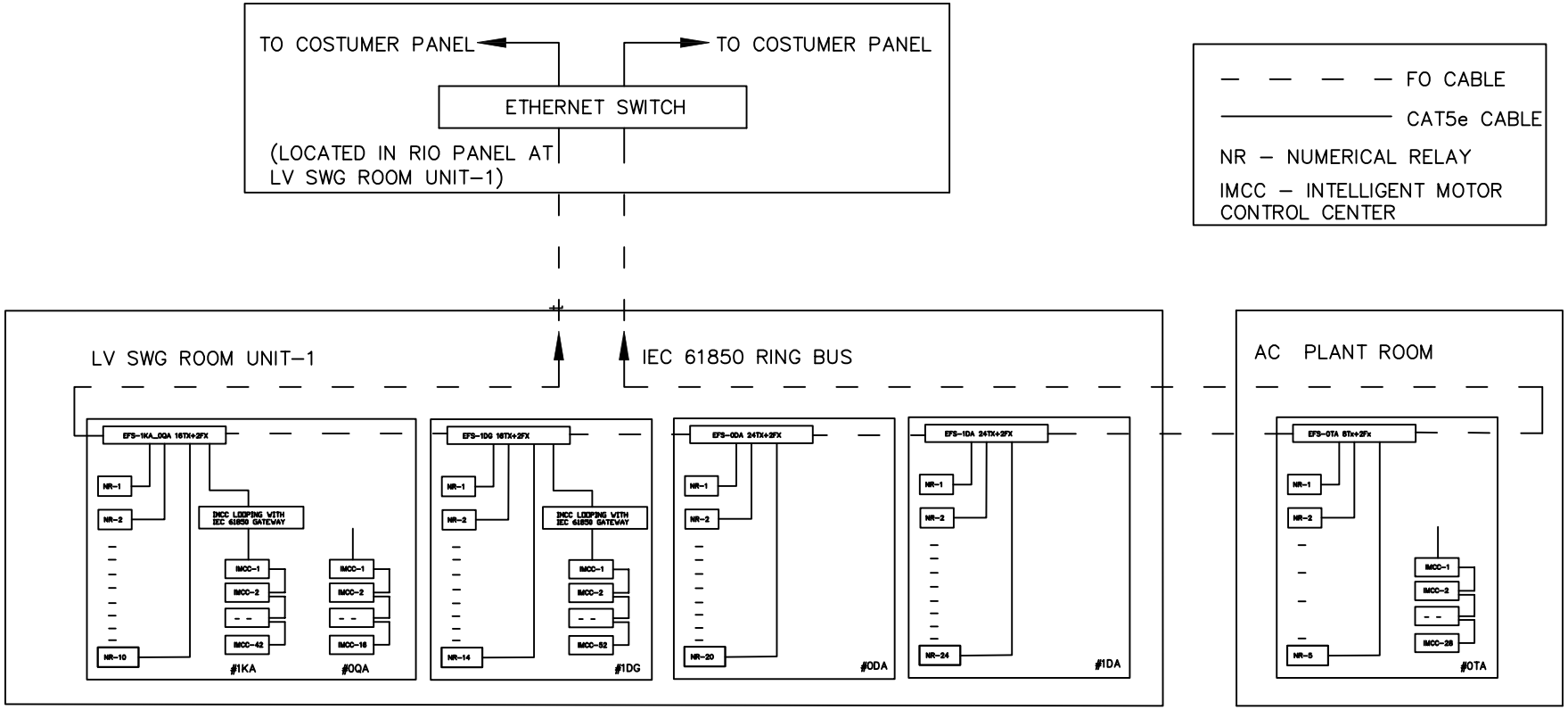

NOTE:

(1) CONNECTION BETWEEN ETHERNET SWITCHES SHALL BE THROUGH FO CABLE. SUPPLY, ROUTING, LAYING AND TERMINATION OF FO CABLE SHALL BE IN BHEL'S SCOPE.
(2) CONNECTION OF NUMERICAL RELAY TO ETHERNET SWITCH SHALL BE THROUGH CAT5e CABLE. SUPPLY AND TERMINATION OF CAT5e CABLE SHALL BE BHEL'S SCOPE.
(3) NR – NUMERICAL RELAY HAVING REAR RJ45 PORT WITH IEC-61850 PROTOCOL.

REV.	3.	4.	6
	1. As per MOM dt 04.12.2018	2.	5

	DATE	NAME	PROJECT:- 2X500MW NEW NEYVELI TPS	BHARAT HEAVY ELECTRICALS LIMITED ELECTROPROCELAIN DIVISION BANGALORE	TITLE:- SYSTEM ARCHITECTURE FOR IMCC & RELAY NETWORK FOR LT SWITCHBOARD	DRG. NO.	REV.
DRAWN	11.10.2018	UMAKANT	OWNER'S CONSULTANT :- TRACTEBEL ENGINEERING			EP-3-CS-112-01B	01
CHECKED	11.10.2018	SAURABH	OWNER:- NLC LIMITED			SCALE: N/A	SHEET NO. 03
APPROVED	11.10.2018	JJM			JOB CODE:		NO. OF SHEET 10

This drawing shall not be copied without our written permission and the contents hereof must not be imparted to a third party nor be used for any unauthorised purpose. Contravention will be prosecuted
BHARAT HEAVY ELECTRICALS LTD.

IEC 61850 SYSTEM ARCHITECTURE FOR LT SWITCHBOARD
(#1DF, #2DF, #0DF, #1SA, & #2SA)

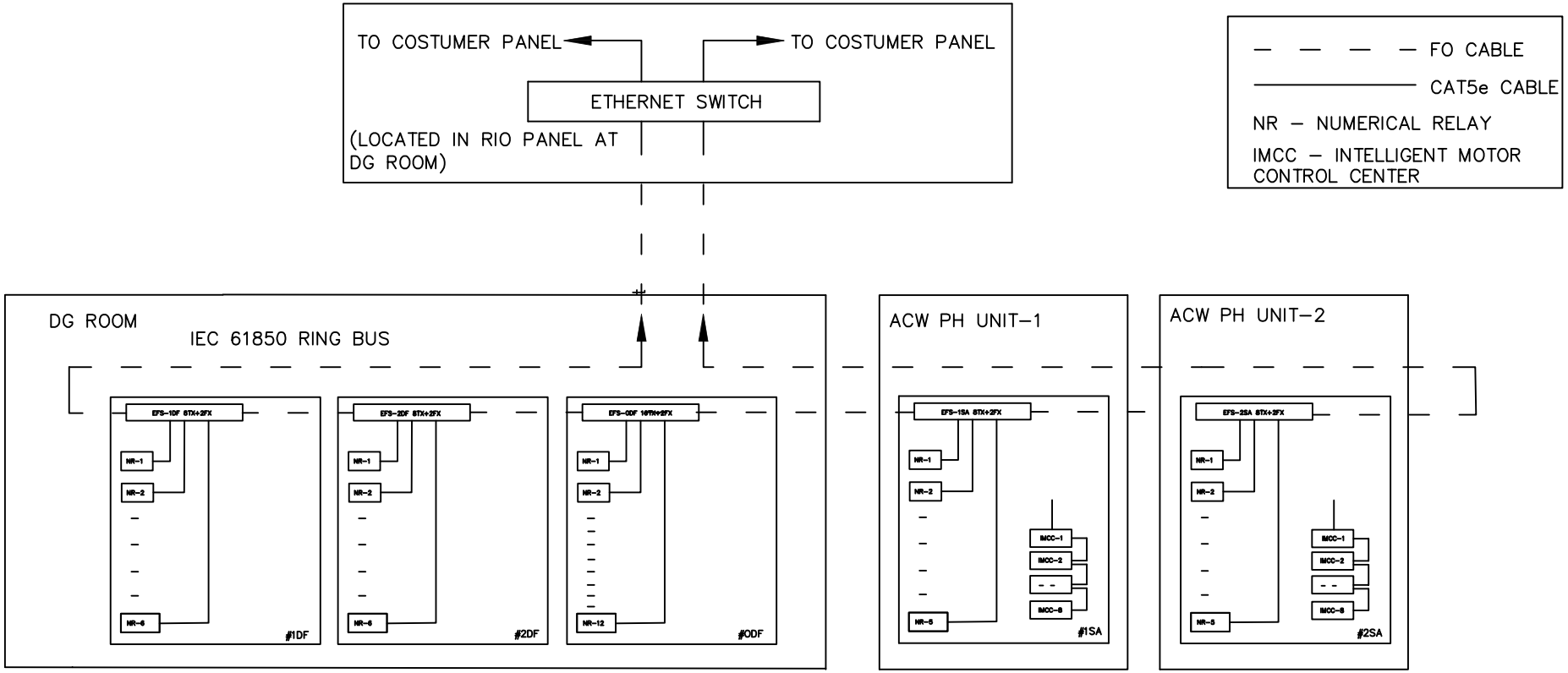

NOTE:

(1) CONNECTION BETWEEN ETHERNET SWITCHES SHALL BE THROUGH FO CABLE. SUPPLY, ROUTING, LAYING AND TERMINATION OF FO CABLE SHALL BE IN BHEL'S SCOPE.
(2) CONNECTION OF NUMERICAL RELAY TO ETHERNET SWITCH SHALL BE THROUGH CAT5e CABLE. SUPPLY AND TERMINATION OF CAT5e CABLE SHALL BE BHEL'S SCOPE.
(3) NR – NUMERICAL RELAY HAVING REAR RJ45 PORT WITH IEC-61850 PROTOCOL.

REV.	3.	4.	6
	1. As per MOM dt 04.12.2018	2.	5

	DATE	NAME	PROJECT:- 2X500MW NEW NEYVELI TPS	BHARAT HEAVY ELECTRICALS LIMITED ELECTROPROCELAIN DIVISION BANGALORE	TITLE:- SYSTEM ARCHITECTURE FOR IMCC & RELAY NETWORK FOR LT SWITCHBOARD	DRG. NO.	REV.
DRAWN	11.10.2018	UMAKANT	OWNER'S CONSULTANT :- TRACTEBEL ENGINEERING			EP-3-CS-112-01B	01
CHECKED	11.10.2018	SAURABH	OWNER:- NLC LIMITED			SCALE: N/A	SHEET NO. 04
APPROVED	11.10.2018	JJM			JOB CODE:		NO. OF SHEET 10

This drawing shall not be copied without our written permission and the contents hereof shall not be imparted to a third party nor be used for any unauthorised purpose. Contravention will be prosecuted
BHARAT HEAVY ELECTRICALS LTD.

IEC 61850 SYSTEM ARCHITECTURE FOR LT SWITCHBOARD (#2HA & #2HC)

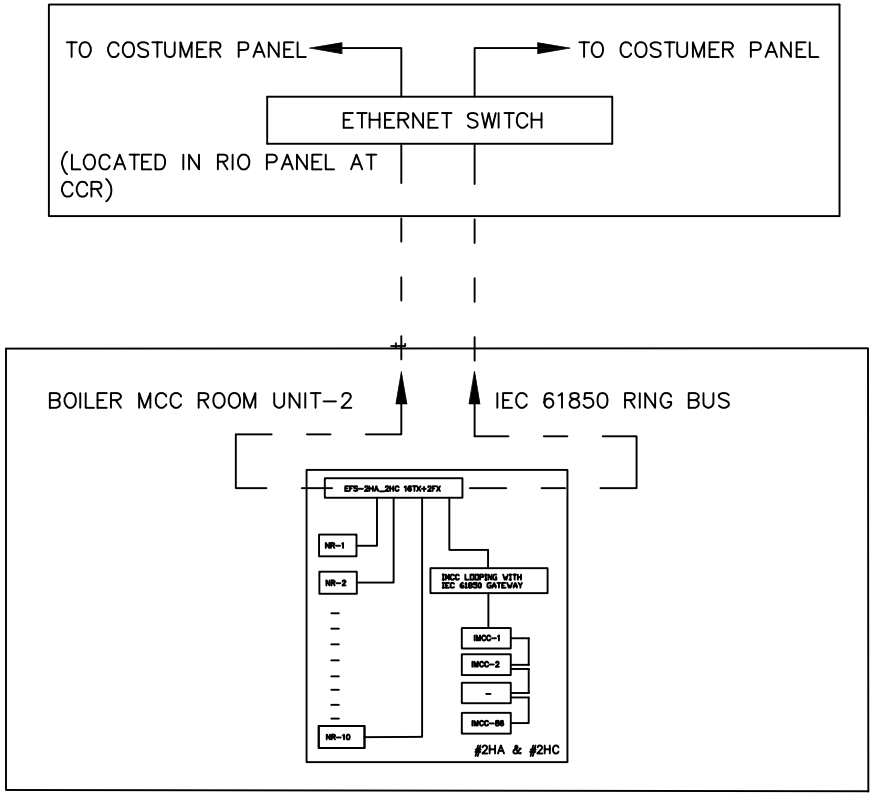

— — — — FO CABLE

——————— CAT5e CABLE

NR – NUMERICAL RELAY

IMCC – INTELLIGENT MOTOR CONTROL CENTER

NOTE:

(1) CONNECTION BETWEEN ETHERNET SWITCHES SHALL BE THROUGH FO CABLE. SUPPLY, ROUTING, LAYING AND TERMINATION OF FO CABLE SHALL BE IN BHEL'S SCOPE.
(2) CONNECTION OF NUMERICAL RELAY TO ETHERNET SWITCH SHALL BE THROUGH CAT5e CABLE. SUPPLY AND TERMINATION OF CAT5e CABLE SHALL BE BHEL'S SCOPE.
(3) NR – NUMERICAL RELAY HAVING REAR RJ45 PORT WITH IEC-61850 PROTOCOL.

REV.	3.	4.	6
	1. As per MOM dt 04.12.2018	2.	5

	DATE	NAME	PROJECT:- 2X500MW NEW NEYVELI TPS	BHARAT HEAVY ELECTRICALS LIMITED ELECTROPROCELAIN DIVISION BANGALORE	TITLE:- SYSTEM ARCHITECTURE FOR IMCC & RELAY NETWORK FOR LT SWITCHBOARD	DRG. NO.	REV.
DRAWN	11.10.2018	UMAKANT	OWNER'S CONSULTANT :- TRACTEBEL ENGINEERING			EP-3-CS-112-01B	01
CHECKED	11.10.2018	SAURABH	OWNER:- NLC LIMITED			SCALE: N/A	SHEET NO. 05
APPROVED	11.10.2018	JJM			JOB CODE:		NO. OF SHEET 10

This drawing shall not be copied without our written permission and the contents hereof must not be imparted to a third party nor be used for any unauthorised purpose. Contravention will be prosecuted
BHARAT HEAVY ELECTRICALS LTD.

IEC 61850 SYSTEM ARCHITECTURE FOR LT SWITCHBOARD
(#2TB, #2HD, #2DB, #2DC, #2DD & #2DE)

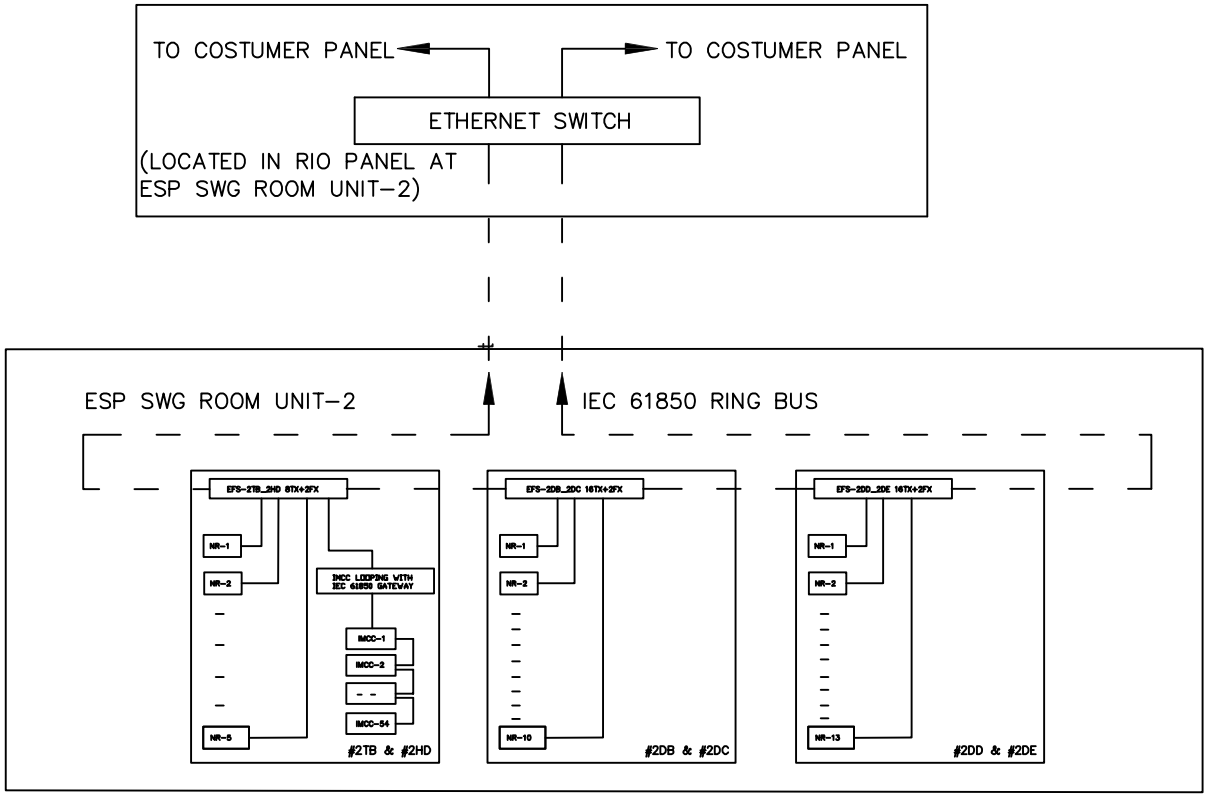

— — — — FO CABLE

——————— CAT5e CABLE

NR – NUMERICAL RELAY

IMCC – INTELLIGENT MOTOR CONTROL CENTER

NOTE:

(1) CONNECTION BETWEEN ETHERNET SWITCHES SHALL BE THROUGH FO CABLE. SUPPLY, ROUTING, LAYING AND TERMINATION OF FO CABLE SHALL BE IN BHEL'S SCOPE.
(2) CONNECTION OF NUMERICAL RELAY TO ETHERNET SWITCH SHALL BE THROUGH CAT5e CABLE. SUPPLY AND TERMINATION OF CAT5e CABLE SHALL BE BHEL'S SCOPE.
(3) NR – NUMERICAL RELAY HAVING REAR RJ45 PORT WITH IEC-61850 PROTOCOL.

REV.	3.	4.	6
	1. As per MOM dt 04.12.2018	2.	5

	DATE	NAME
DRAWN	11.10.2018	UMAKANT
CHECKED	11.10.2018	SAURABH
APPROVED	11.10.2018	JJM

PROJECT:- 2X500MW NEW NEYVELI TPS

OWNER'S CONSULTANT :- TRACTEBEL ENGINEERING

OWNER:- NLC LIMITED

BHARAT HEAVY ELECTRICALS LIMITED
ELECTROPROCELAIN DIVISION
BANGALORE

TITLE:-
SYSTEM ARCHITECTURE FOR IMCC & RELAY NETWORK FOR LT SWITCHBOARD

JOB CODE:

DRG. NO. EP-3-CS-112-01B

REV. 01

SCALE: N/A

SHEET NO. 06

NO. OF SHEET 10

This drawing shall not be copied without our written permission and the contents hereof must not be imparted to a third party nor be used for any unauthorized purpose. Contravention will be prosecuted
ERARATI PEAY ELECTRICALS LTD.

IEC 61850 SYSTEM ARCHITECTURE FOR LT SWITCHBOARD
(#2KA, #0QB, #2DG, #0DB & #2DA)

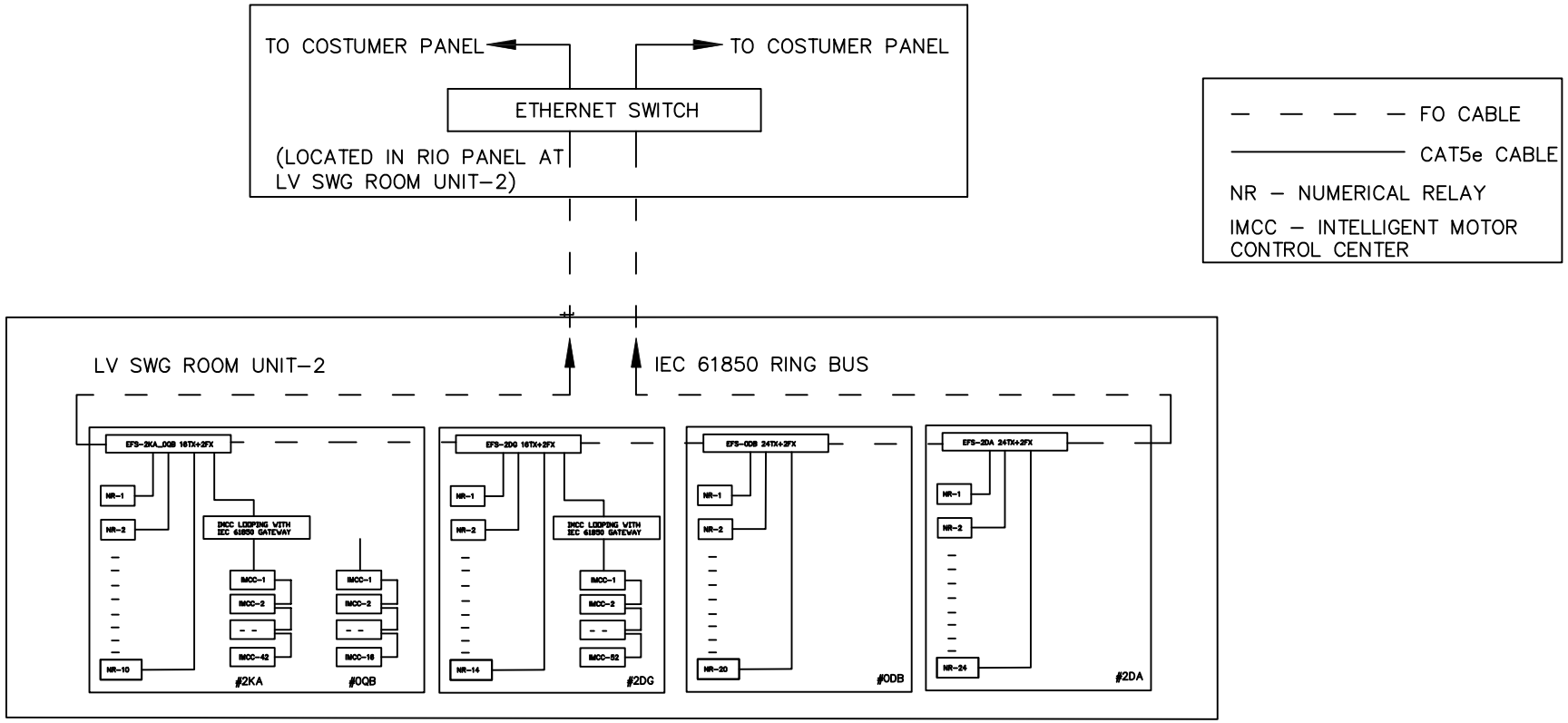

NOTE:

(1) CONNECTION BETWEEN ETHERNET SWITCHES SHALL BE THROUGH FO CABLE. SUPPLY, ROUTING, LAYING AND TERMINATION OF FO CABLE SHALL BE IN BHEL'S SCOPE.
(2) CONNECTION OF NUMERICAL RELAY TO ETHERNET SWITCH SHALL BE THROUGH CAT5e CABLE. SUPPLY AND TERMINATION OF CAT5e CABLE SHALL BE BHEL'S SCOPE.
(3) NR – NUMERICAL RELAY HAVING REAR RJ45 PORT WITH IEC-61850 PROTOCOL.

REV.	3.	4.	6
	1. As per MOM dt 04.12.2018	2.	5

	DATE	NAME	PROJECT:- 2X500MW NEW NEYVELI TPS	BHARAT HEAVY ELECTRICALS LIMITED ELECTROPROCELAIN DIVISION BANGALORE	TITLE:- SYSTEM ARCHITECTURE FOR IMCC & RELAY NETWORK FOR LT SWITCHBOARD	DRG. NO.	REV.
DRAWN	11.10.2018	UMAKANT	OWNER'S CONSULTANT :- TRACTEBEL ENGINEERING			EP-3-CS-112-01B	01
CHECKED	11.10.2018	SAURABH	OWNER:- NLC LIMITED			SCALE: N/A	SHEET NO. 07
APPROVED	11.10.2018	JJM			JOB CODE:		NO. OF SHEET 10

This drawing shall not be copied without our written permission and the contents hereof shall not be imparted to a third party nor be used for any unauthorised purpose. Contravention will be prosecuted
ERARATI PEAY ELECTRICALS LTD.

IEC 61850 SYSTEM ARCHITECTURE FOR LT SWITCHBOARD (#0DD & #0DE)

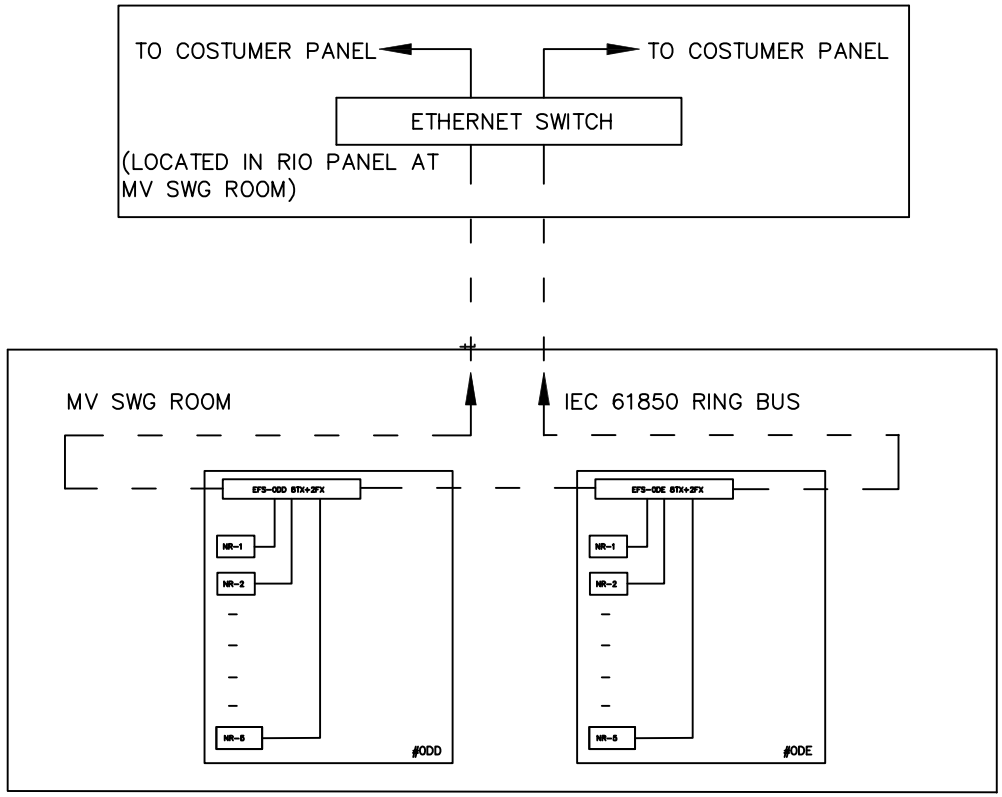

— — — — FO CABLE

———————— CAT5e CABLE

NR – NUMERICAL RELAY

IMCC – INTELLIGENT MOTOR CONTROL CENTER

NOTE:

(1) CONNECTION BETWEEN ETHERNET SWITCHES SHALL BE THROUGH FO CABLE. SUPPLY, ROUTING, LAYING AND TERMINATION OF FO CABLE SHALL BE IN BHEL'S SCOPE.
(2) CONNECTION OF NUMERICAL RELAY TO ETHERNET SWITCH SHALL BE THROUGH CAT5e CABLE. SUPPLY AND TERMINATION OF CAT5e CABLE SHALL BE BHEL'S SCOPE.
(3) NR – NUMERICAL RELAY HAVING REAR RJ45 PORT WITH IEC–61850 PROTOCOL.

REV.	3.	4.	6
	1. As per MOM dt 04.12.2018	2.	5

	DATE	NAME	PROJECT:- 2X500MW NEW NEYVELI TPS	BHARAT HEAVY ELECTRICALS LIMITED	TITLE:-	DRG. NO.	REV.
DRAWN	11.10.2018	UMAKANT	OWNER'S CONSULTANT :- TRACTEBEL ENGINEERING	ELECTROPROCELAIN DIVISION	SYSTEM ARCHITECTURE FOR IMCC & RELAY NETWORK FOR LT SWITCHBOARD	EP-3-CS-112-01B	01
CHECKED	11.10.2018	SAURABH	OWNER:- NLC LIMITED	BANGALORE		SCALE: N/A	SHEET NO. 08
APPROVED	11.10.2018	JJM			JOB CODE:		NO. OF SHEET 10

This drawing shall not be copied without our written permission and the contents hereof shall not be imparted to a third party nor be used for any unauthorised purpose. Contravention will be prosecuted
BHARAT HEAVY ELECTRICALS LTD.

IEC 61850 SYSTEM ARCHITECTURE FOR LT SWITCHBOARD (#0DC)

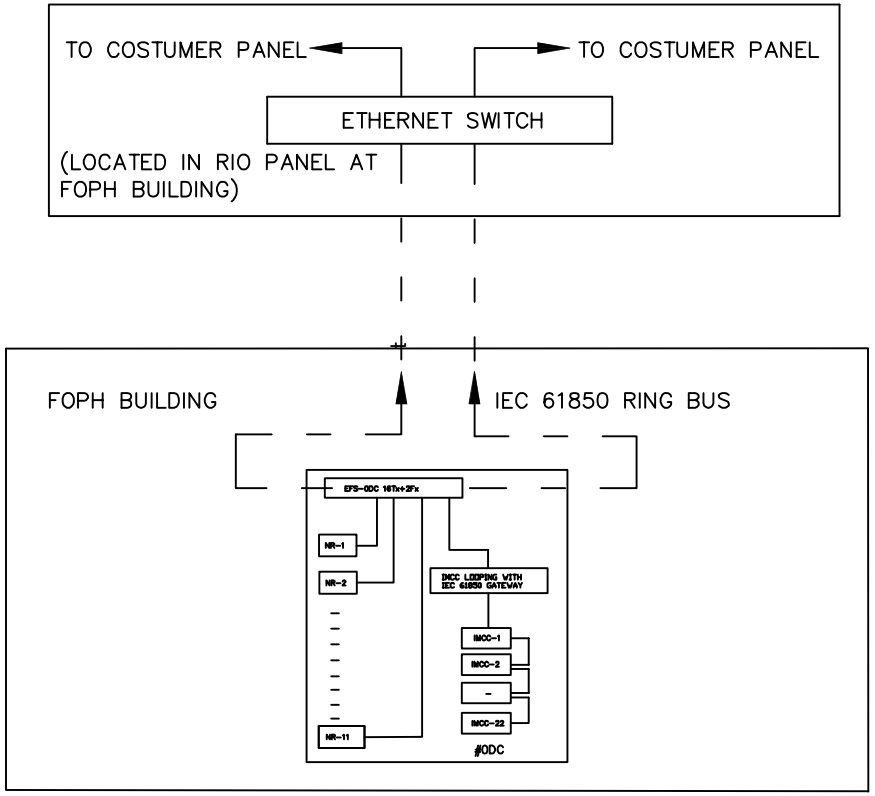

— — — — FO CABLE

———————— CAT5e CABLE

NR – NUMERICAL RELAY

IMCC – INTELLIGENT MOTOR CONTROL CENTER

NOTE:

(1) CONNECTION BETWEEN ETHERNET SWITCHES SHALL BE THROUGH FO CABLE. SUPPLY, ROUTING, LAYING AND TERMINATION OF FO CABLE SHALL BE IN BHEL'S SCOPE.
(2) CONNECTION OF NUMERICAL RELAY TO ETHERNET SWITCH SHALL BE THROUGH CAT5e CABLE. SUPPLY AND TERMINATION OF CAT5e CABLE SHALL BE BHEL'S SCOPE.
(3) NR – NUMERICAL RELAY HAVING REAR RJ45 PORT WITH IEC–61850 PROTOCOL.

REV.	3.	4.	6
	1. As per MOM dt 04.12.2018	2.	5

	DATE	NAME	PROJECT:- 2X500MW NEW NEYVELI TPS	BHARAT HEAVY ELECTRICALS LIMITED	TITLE:-	DRG. NO.	REV.
DRAWN	11.10.2018	UMAKANT	OWNER'S CONSULTANT :- TRACTEBEL ENGINEERING	ELECTROPROCELAIN DIVISION	SYSTEM ARCHITECTURE FOR IMCC & RELAY NETWORK FOR LT SWITCHBOARD	EP-3-CS-112-01B	01
CHECKED	11.10.2018	SAURABH	OWNER:- NLC LIMITED	BANGALORE		SCALE: N/A / SHEET NO.	09
APPROVED	11.10.2018	JJM			JOB CODE:	NO. OF SHEET	10

This drawing shall not be copied without our written permission and the contents hereof shall not be imparted to a third party nor be used for any unauthorised purpose. Contravention will be prosecuted
BHARAT HEAVY ELECTRICALS LTD.

IEC 61850 SYSTEM ARCHITECTURE FOR LT SWITCHBOARD (#0WA & #0WB)

— — — — FO CABLE

———————— CAT5e CABLE

NR – NUMERICAL RELAY

IMCC – INTELLIGENT MOTOR CONTROL CENTER

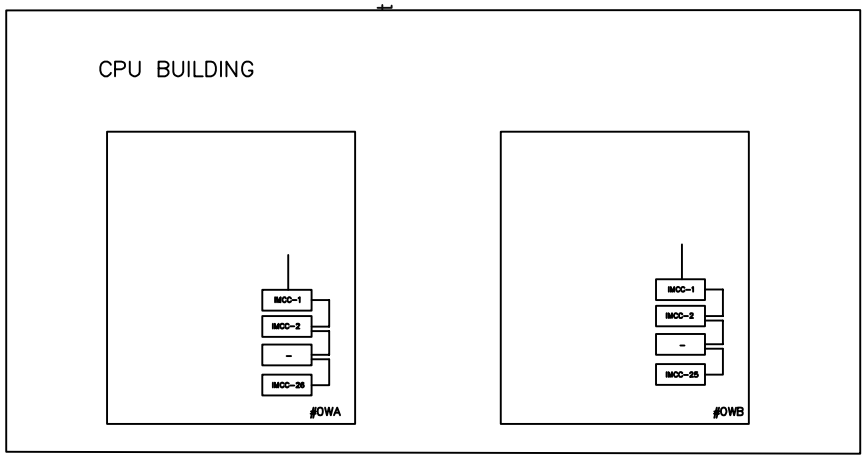

NOTE:

(1) CONNECTION BETWEEN ETHERNET SWITCHES SHALL BE THROUGH FO CABLE. SUPPLY, ROUTING, LAYING AND TERMINATION OF FO CABLE SHALL BE IN BHEL'S SCOPE.
(2) CONNECTION OF NUMERICAL RELAY TO ETHERNET SWITCH SHALL BE THROUGH CAT5e CABLE. SUPPLY AND TERMINATION OF CAT5e CABLE SHALL BE BHEL'S SCOPE.
(3) NR – NUMERICAL RELAY HAVING REAR RJ45 PORT WITH IEC–61850 PROTOCOL.

REV.	3.	4.	6
	1. As per MOM dt 04.12.2018	2.	5

	DATE	NAME	PROJECT:- 2X500MW NEW NEYVELI TPS	BHARAT HEAVY ELECTRICALS LIMITED ELECTROPROCELAIN DIVISION BANGALORE	TITLE:- SYSTEM ARCHITECTURE FOR IMCC & RELAY NETWORK FOR LT SWITCHBOARD	DRG. NO.	REV.
DRAWN	11.10.2018	UMAKANT	OWNER'S CONSULTANT :- TRACTEBEL ENGINEERING			EP-3-CS-112-01B	01
CHECKED	11.10.2018	SAURABH	OWNER:- NLC LIMITED			SCALE: N/A	SHEET NO. 10
APPROVED	11.10.2018	JJM			JOB CODE:		NO. OF SHEET 10

Bharat Heavy Electricals Limited
(A GOVERNMENT OF INDIA UNDERTAKING)
ELECTROPORCELAINS DIVISION
Prof. C.N.R.Rao Circle, Science Institute Post,
Malleshwaram, BANGALORE – 560 012 INDIA
Website : www.bhelceramics.com

Project : 2X500MW NEW NEYVELI TPS
TECHNICAL SPECIFICATION. EP-4-TS-NNTP-NW-001 R00
NETWORKING FOR IMCC'S & NUMERIC RELAYS
PRICE BID FORMAT (Annexure-D)

SL.No.	Material Code	Description	Unit	Quantity	Unit price	Total Price
1		NETWORKING OF IMCC'S AND NUMERICAL RELAY @ NNTP SITE	SET	1		
A		SUPPLY OF MATERIAL AS PER BOM				
B		SERVICE:- MOUNTING OF GATEWAY & ETHERNET SWITCHES WITH ASSOCIATED ACCESSORIES, LAYING OF CABLE, TERMINATION OF CABLES ETC.				
C		SERVICE:- DEPUTATION OF OEM'S (SIEMENS FOR RELAY & SCHNEIDER FOR IMCC)/SERVICE PARTNER SERVICE ENGINEER				

NOTE:- PRICE OF SL.NO 1 SHALL BE SUM OF A+B+C

Bharat Heavy Electricals Limited
(A GOVERNMENT OF INDIA UNDERTAKING)
ELECTROPORCELAINS DIVISION
Prof. C.N.R.Rao Circle, Science Institute Post,
Malleshwaram, BANGALORE – 560 012 INDIA
Website : www.bhelceramics.com

Project : 2x500MW NEW NEYVELI TPS			
TECHNICAL SPECIFICATION. EP-4-TS-NNTP-NW-001 R00			
NETWORKING FOR IMCC'S & NUMERIC RELAYS			
Addition / Deletion list (Annexure-E)			
SL.No.	**Item Desc ription**	**Unit**	**Unit price**
1	Modbus TCP to IEC61850 Gateway with SMPS	EA	
2	Layer 2 Ethernet Switch with 2 100Base-FX Single Mode Fibre Ports (24Tx * 2Fx) with MCB	EA	
3	Layer 2 Ethernet Switch with 2 100Base-FX Single Mode Fibre Ports (16Tx * 2Fx) with MCB	EA	
4	Layer 2 Ethernet Switch with 2 100Base-FX Single Mode Fibre Ports (8Tx * 2Fx) with MCB	EA	
5	Cat5e cable	MTR	
6	FO cable adaptor/connector	EA	
7	Cat5e cable connector	EA	
8	LAPTOP	EA	
9	CHARGES PER VISIT FOR MOUNTING OF GATEWAY & ETHERNET SWITCHES WITH ASSOCIATED ACCESSORIES, LAYING OF CABLE, TERMINATION OF CABLES ETC.	VISIT	
10	CHARGES PER MANDAY FOR MOUNTING OF GATEWAY & ETHERNET SWITCHES WITH ASSOCIATED ACCESSORIES, LAYING OF CABLE, TERMINATION OF CABLES ETC.	MANDAYS	
Note : Above items are indicative.Bidder to furnish unit price of all components & equipments used in this tender for successful operation of NETWORKING SYSTEM.			

Bharat Heavy Electricals Limited
(A GOVERNMENT OF INDIA UNDERTAKING)
ELECTROPORCELAINS DIVISION
Prof. C.N.R.Rao Circle, Science Institute Post,
Malleshwaram, BANGALORE – 560 012 INDIA
Website : www.bhelceramics.com

Project : 2X500MW NEW NEYVELI TPS
TECHNICAL SPECIFICATION. EP-4-TS-NNTP-NW-001 R00
NETWORKING FOR IMCC'S & NUMERIC RELAYS
Drawings/ Documents Submission (Annexure-F)

SL.No.	Description	Hard Copy	Soft Copy (AUTOCAD) (.dwg)	Soft Copy (.pdf)	CD
1	All Drawings / Documents -First Submission	3	Yes	Yes	NA
2	Final drawings/ documents after approval for distribution purpose (spiral binded)	4	Yes	Yes	3
3	As built drawings/ documents	4	Yes	Yes	3
4	O&M Manual	4	NA	Yes	3
5	Instruction Manual (Commissioning procedure, Data Handbooks, Catalogues etc)	4	NA	Yes	3
6	Performance and Guarantee Test reports	4	NA	Yes	3

Note: **All the above documents/ drawings shall be supplied to BHEL without any price implication.**

Bharat Heavy Electricals Limited
(A GOVERNMENT OF INDIA UNDERTAKING)
ELECTROPORCELAINS DIVISION
Prof. C.N.R.Rao Circle, Science Institute Post,
Malleshwaram, BANGALORE – 560 012 INDIA
Website : www.bhelceramics.com

Project :2X500MW NEW NEYVELI TPS
TECHNICAL SPECIFICATION. EP-4-TS-NNTP-NW-001 R00
NETWORKING FOR IMCC'S & NUMERIC RELAYS
Deviation Sheet (Annexure-G)

SL.No.	Clause	Page	Description	Bidder's Deviation	Price impact : Yes / NO